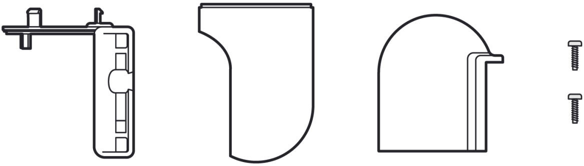

✓

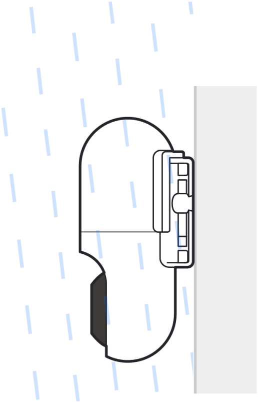

✗

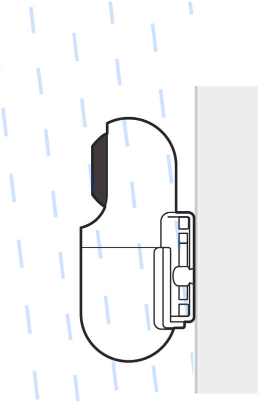

✓

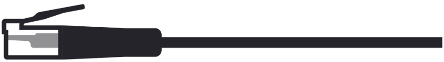

✗

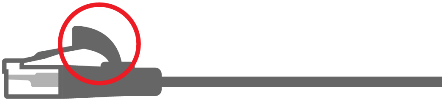

✗

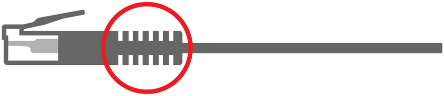

Ⓐ

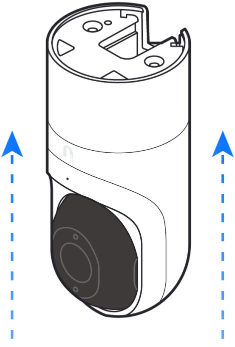

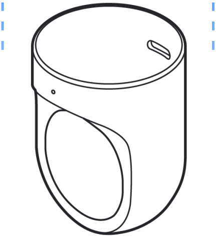

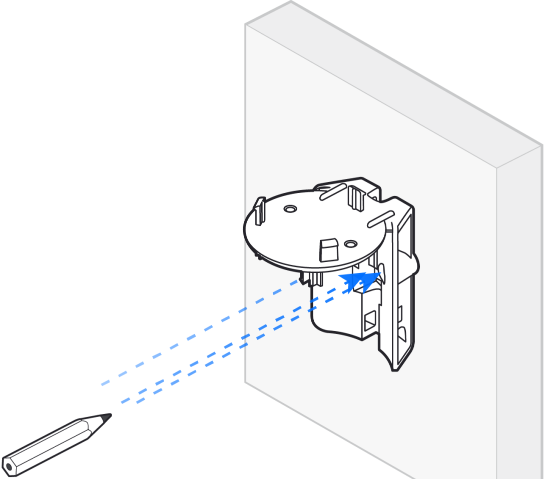

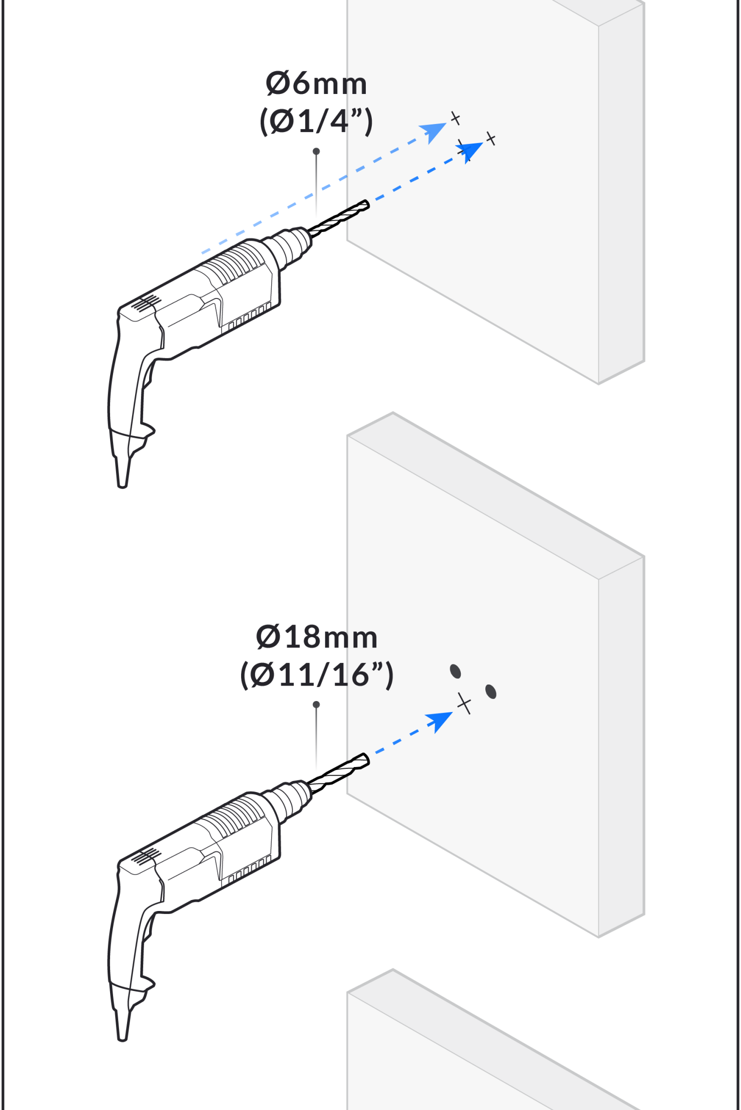
Ø6mm
(Ø1/4”)
Ø18mm
(Ø11/16”)

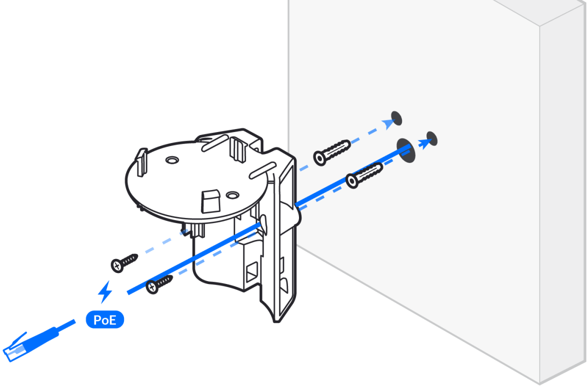

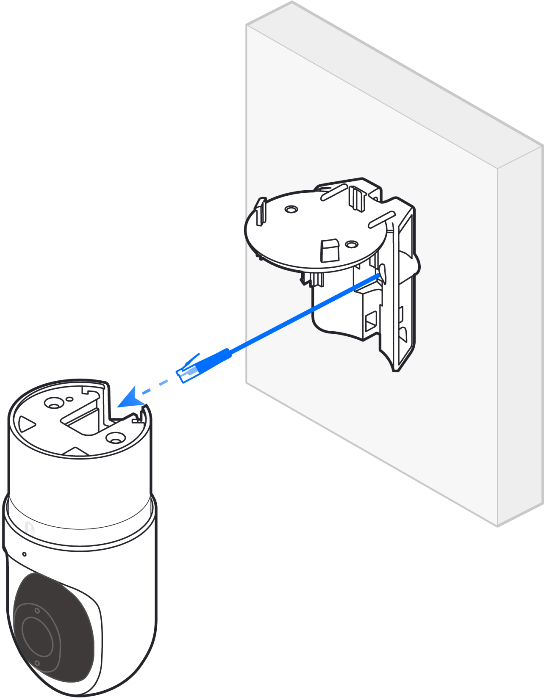

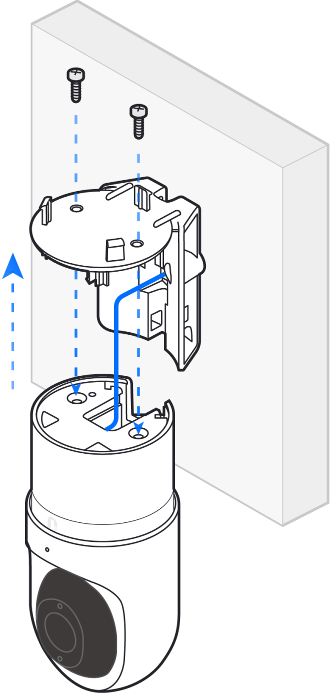

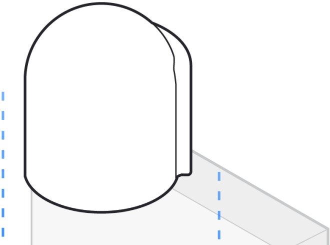

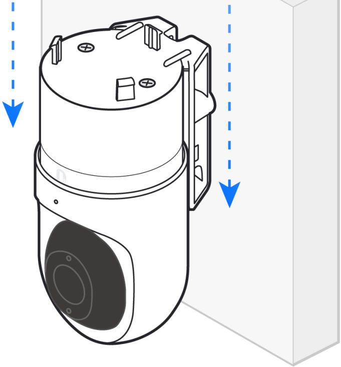

B

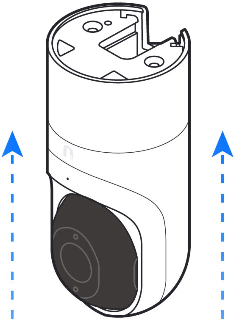

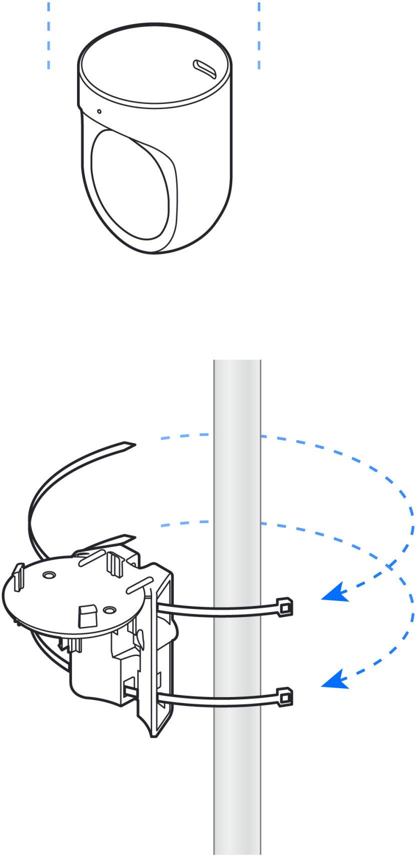

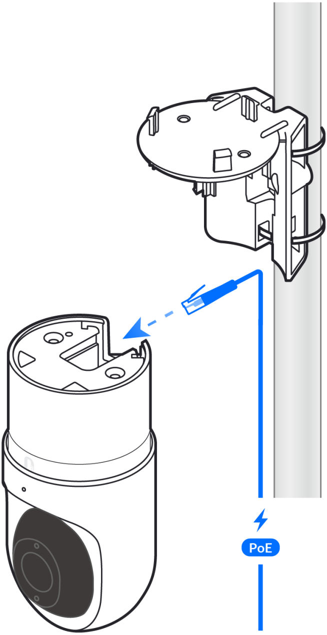

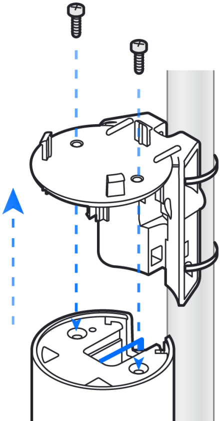

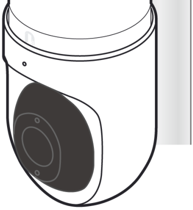

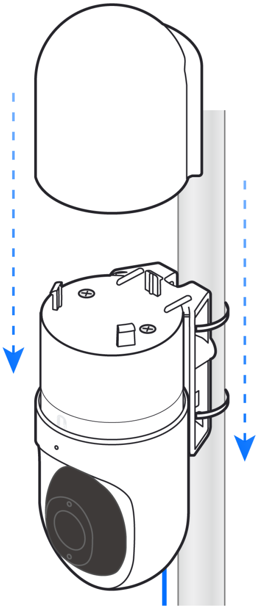

UniFi® Protect

G3 Flex PWM

Get Answers
community.ui.com