DS-1227ZJ-DM37

In-Ceiling Mount

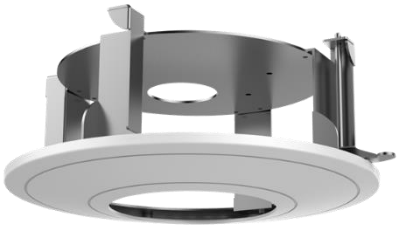

Features

- Steel and plastic with surface spray treatment
- In-ceiling mount saves installation space

Dimension

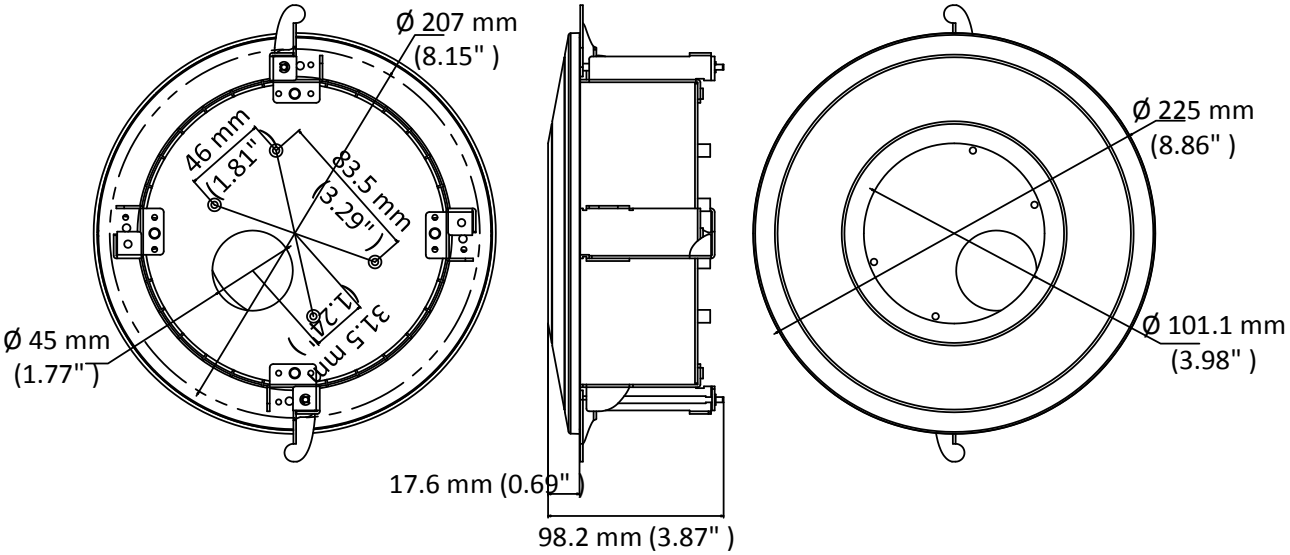

Available Model

DS-1227ZJ-DM37

Parameter

Model / Parameters	DS-1227ZJ-DM37
	In-Ceiling Mount
Appearance	Hikvision White
Material	Steel and Plastic
Dimension	Ø 225 mm × 98.2 mm (8.86" × 3.87")
Weight	700 g (1.54 lb.)

Notes

- The mount should be installed on the flat ceiling.
- The ceiling must be capable of supporting over 3 times as much as the total weight of the camera and the mount.
- The maximum load capacity of the mount is 3 kg (6.6 lb.).